| Centre Number | Candidate Number |
|---|---|
| | |

Candidate Name _____

**CAMBRIDGE INTERNATIONAL EXAMINATIONS**

**General Certificate of Education Advanced Level**

# CHEMISTRY 9701/4

PAPER 4

**OCTOBER/NOVEMBER SESSION 2002**

1 hour

Candidates answer on the question paper.
Additional materials:
Data Booklet.

**TIME** 1 hour

**INSTRUCTIONS TO CANDIDATES**

Write your name, Centre number and candidate number in the spaces at the top of this page.
Answer **all** questions.
Write your answers in the spaces provided on the question paper.

**INFORMATION FOR CANDIDATES**

The number of marks is given in brackets [ ] at the end of each question or part question.
You may lose marks if you do not show your working or if you do not use appropriate units.

| FOR EXAMINER'S USE | |
|---|---|
| 1 | |
| 2 | |
| 3 | |
| 4 | |
| 5 | |
| 6 | |
| TOTAL | |

**This question paper consists of 11 printed pages and 1 blank page.**

(NH/CG) S14878/4
© CIE 2002

University of Cambridge Local Examinations Syndicate

**[Turn over**

For Examiner's Use

Answer **all** the questions in the spaces provided.

**1** **(a)** The following diagram shows the apparatus needed to measure the standard electrode potential of copper. In the spaces below, identify or describe what the three letters **A**–**C** represent.

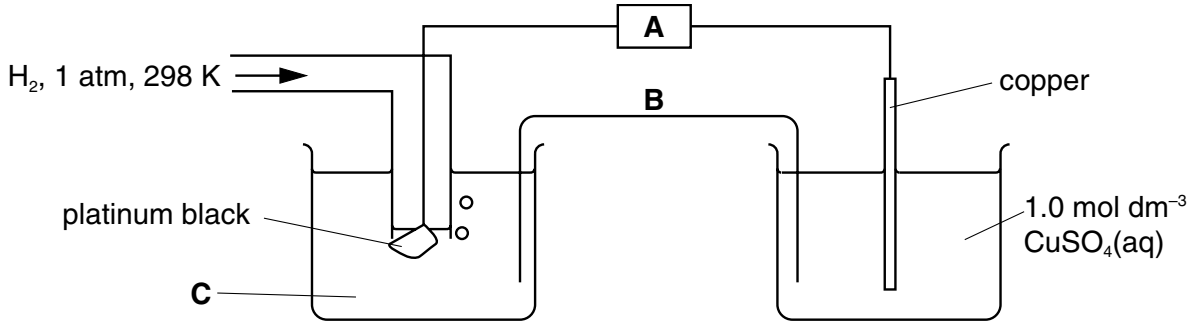


**A** .....

**B** .....

**C** .....

[3]

**(b)** A student wishes to measure the standard electrode potential of the $Fe^{3+}/Fe^{2+}$ electrode. In the space below, draw and label the set-up for the right-hand beaker that would replace the one shown in the diagram above.

[2]

**(c)** Predict how the *E* of the $Fe^{3+}/Fe^{2+}$ electrode would vary as

**(i)** the $[Fe^{3+}]$ is increased,

.....

**(ii)** the $[Fe^{2+}]$ is increased.

.....

[1]

**(d)** An aqueous solution of iron(III) chloride is used to dissolve the excess of copper metal from printed-circuit boards.

Use the half-equations and $E^{\ominus}$ values in the *Data Booklet* to

**(i)** write an equation for this reaction,

.....

**(ii)** calculate the $E^{\ominus}_{cell}$ for the reaction.

.....

[2]

**(e)** The solution resulting from dissolving the copper from a small printed-circuit board was acidified and titrated with 0.0200 mol $dm^{-3}$ $KMnO_4$. A volume of 75.0 $cm^3$ was required for the end point.

The equation for the titration reaction is as follows.

$$5Fe^{2+} + MnO_4^- + 8H^+ \longrightarrow 5Fe^{3+} + Mn^{2+} + 4H_2O$$

Calculate

**(i)** the number of moles of $Fe^{2+}$ in the solution,

**(ii)** the mass of copper that had dissolved from the printed-circuit board.

[4]

[Total: 12]

For Examiner's Use

**2** **(a)** Write an equation to represent the lattice energy of sodium oxide, $Na_2O$.

.....[1]

**(b)** The Born-Haber cycle shown may be used to calculate the lattice energy of sodium oxide.

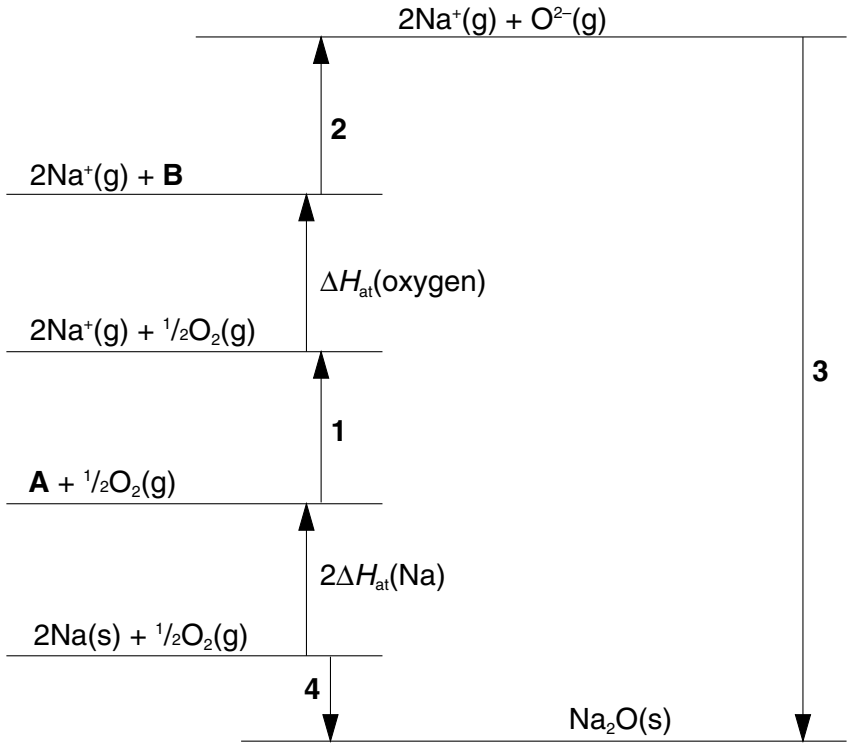


**(i)** In the spaces below, identify the species **A** and **B** in the cycle, including the appropriate state symbols.

species **A** ..... species **B** .....

**(ii)** Identify the enthalpy changes labelled by the numbers **1** to **4** in the cycle.

**1** .....

**2** .....

**3** .....

**4** .....

[3]

**(c)** Use your cycle, the following data, and further data from the *Data Booklet* to calculate a value for the lattice energy of sodium oxide.

Data: enthalpy change of atomisation for Na(s) $+107\ kJ\ mol^{-1}$
first electron affinity of oxygen $-141\ kJ\ mol^{-1}$
second electron affinity of oxygen $+798\ kJ\ mol^{-1}$
enthalpy change of formation of $Na_2O(s)$ $-414\ kJ\ mol^{-1}$
enthalpy change of atomisation for oxygen = half the bond energy for $O_2$.

[3]

**(d) (i)** How would you expect the magnitude of lattice energy of magnesium oxide to compare with that of sodium oxide? Explain your reasoning.

.....

.....

.....

**(ii)** State a use of magnesium oxide, and explain how the use relates to your answer in part **(d) (i)**.

.....

.....

[4]

[Total: 11]



**[Turn over**

**3** **(a)** **(i)** On the following axes, sketch the variation in melting points of the elements in Goup IV.

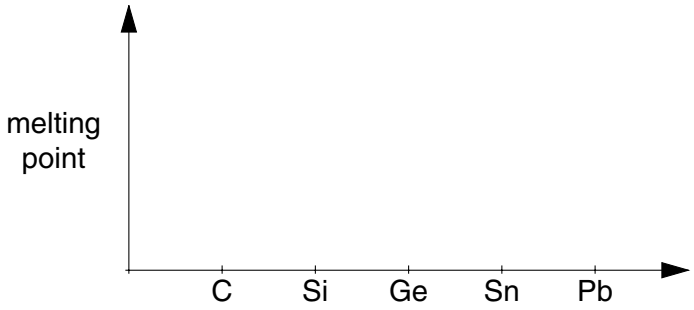


[2]

**(ii)** Explain how this variation in melting point is related to the structure and bonding of the elements.

.....

.....

.....

.....[2]

**(b)** $CCl_4$ and $SiCl_4$ behave differently with water.

**(i)** Describe the reaction (if any) of $CCl_4$ with water.

.....

**(ii)** Describe the reaction (if any) of $SiCl_4$ with water.

.....

**(iii)** Write equations for any reactions that occur.

.....

.....

**(iv)** Explain why these two chlorides differ in their behaviour with water.

.....

.....

[4]

[Total: 8]

**4** **(a)** The melting point and density of a typical transition element such as iron differ from those of a typical s-block element such as calcium. Describe and explain these differences.

.....

.....

.....

.....[3]

**(b)** Suggest a reason why iron forms compounds containing $Fe^{3+}$ ions as well as compounds containing $Fe^{2+}$ ions, whereas calcium only forms compounds containing $Ca^{2+}$ ions.

.....

.....[1]

**(c)** An important ore of iron is siderite, iron(II) carbonate. The first step in converting it into iron is to heat it in air. When heated in air, both calcium carbonate and iron(II) carbonate decompose, but in different ways.

**(i)** Write an equation to represent the thermal decomposition of calcium carbonate.

.....

**(ii)** When siderite is heated in air, carbon dioxide is evolved and iron(III) oxide, $Fe_2O_3$, is left.

Construct an equation for this reaction.

.....

**(iii)** Calculate how much iron(III) oxide can be obtained by heating 10 tonnes of siderite.

.....

.....
[4]

[Total: 8]

**5** Benzene can be converted into nitrobenzene by a nitration reaction.

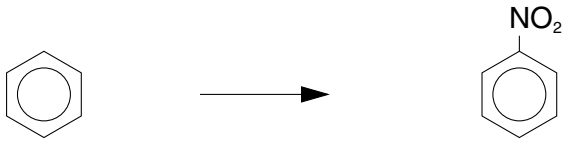


**(a)** State the reagents and conditions necessary to carry out this reaction.

.....

.....[2]

**(b)** What type of reaction mechanism is this?

.....[1]

**(c)** The reaction proceeds via two steps:

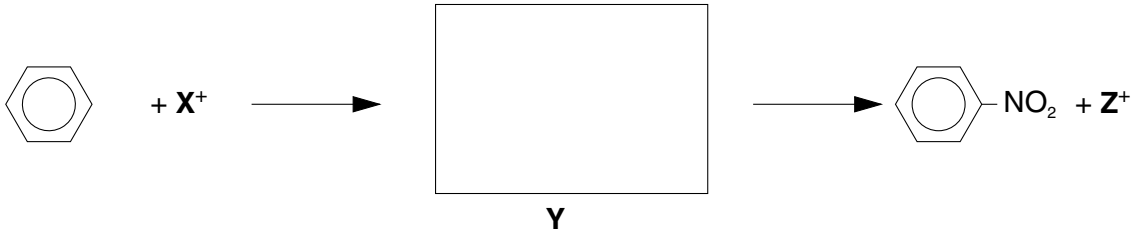


**(i)** Draw the structure of the intermediate **Y** in the box.

**(ii)** Identify the cation $\mathbf{X}^+$.....

**(iii)** Identify the cation $\mathbf{Z}^+$.....

**(iv)** Write an equation to show how $\mathbf{X}^+$ is produced from the reagents.

.....

[5]

**(d)** Some aromatic poly-nitro compounds are used in perfumes as artificial musks. An example is 'Baur musk'.

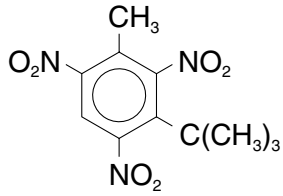


Baur musk

**(i)** Draw the structural formula of the hydrocarbon that could be nitrated in order to produce Baur musk.

**(ii)** Suggest the structural formula of the compound formed by reacting Baur musk with an excess of tin and concentrated hydrochloric acid.

[2]

[Total: 10]



**[Turn over**

For Examiner's Use

**6** Amides can be made by reacting amines with acyl chlorides, as in the example below.

$$CH_3CH_2COCl + H_2NCH_2CH_2CH_3 \longrightarrow CH_3CH_2CONHCH_2CH_2CH_3 + HCl$$

**(a)** What type of reaction mechanism is this?

.....[1]

**(b)** What compound could $CH_3CH_2COCl$ be made from, and what reagent would you use?

.....

.....[2]

**(c)** The amine $CH_3CH_2CH_2NH_2$ can be made from $CH_3CH_2Br$ in two steps.




**(i)** Draw the structural formula of the intermediate in the box provided.

.....

**(ii)** State the reagents and conditions for step I.

.....

**(iii)** State the reagents and conditions for step II.

.....
[4]

**(d)** *Kevlar* is a low weight, high strength polyamide used as a reinforcement in car tyres, aircraft wings and in bullet-proof vests. A portion of its chain is shown below.




**(i)** What type of polymerisation produces *Kevlar*?

.....

**(ii)** Draw the structural formulae of the monomers from which *Kevlar* is made.

**(iii)** Suggest a reason why *Kevlar* is much stronger than most other polyamides.

.....

**(iv)** What reaction conditions are needed to break the amide bonds in *Kevlar*?

.....

[4]

[Total: 11]

**BLANK PAGE**